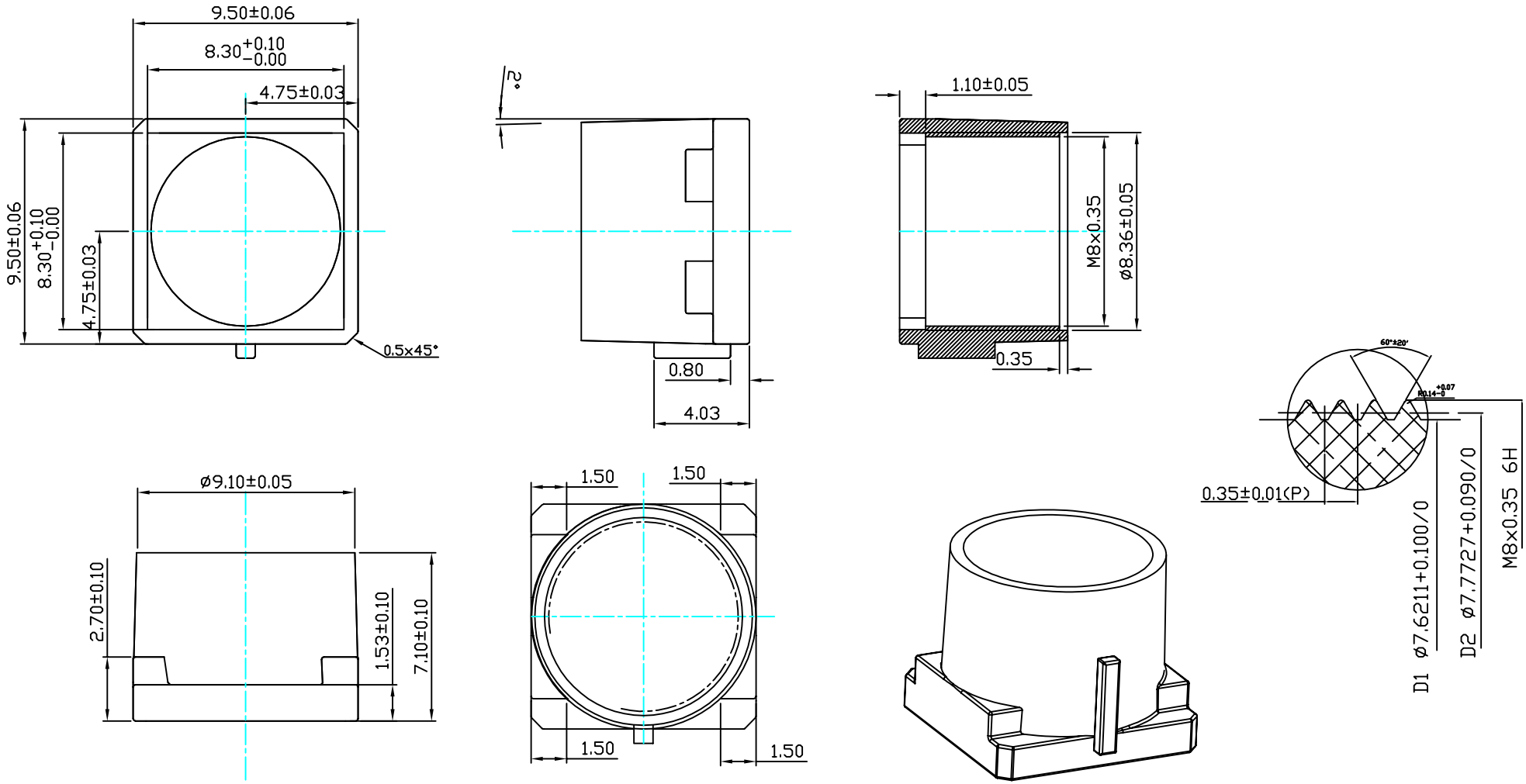

NO.	REVISION CONTENT	DATE	NAME	Dfaut tolerance	
D					
C					
B	MODIFY THE THEARD DETAIL	11.15.04	Digo	Angle	1°
A	INITIAL RELEASE.	10.16.04	Digo	X.X	±0.10
				X.XX	±0.05

Quantity		GR	CR	Material	PC
Total		No			
Marker	signature	Date			
Design	Digo	11.05.04		Unit	mm
Check				Scale	8 : 1
Approve				Rev	B

Sunex China
Tel:0086-21-67741423
Fax:0086-21-57740268

Part Name: PH746E

Description: HOLDER