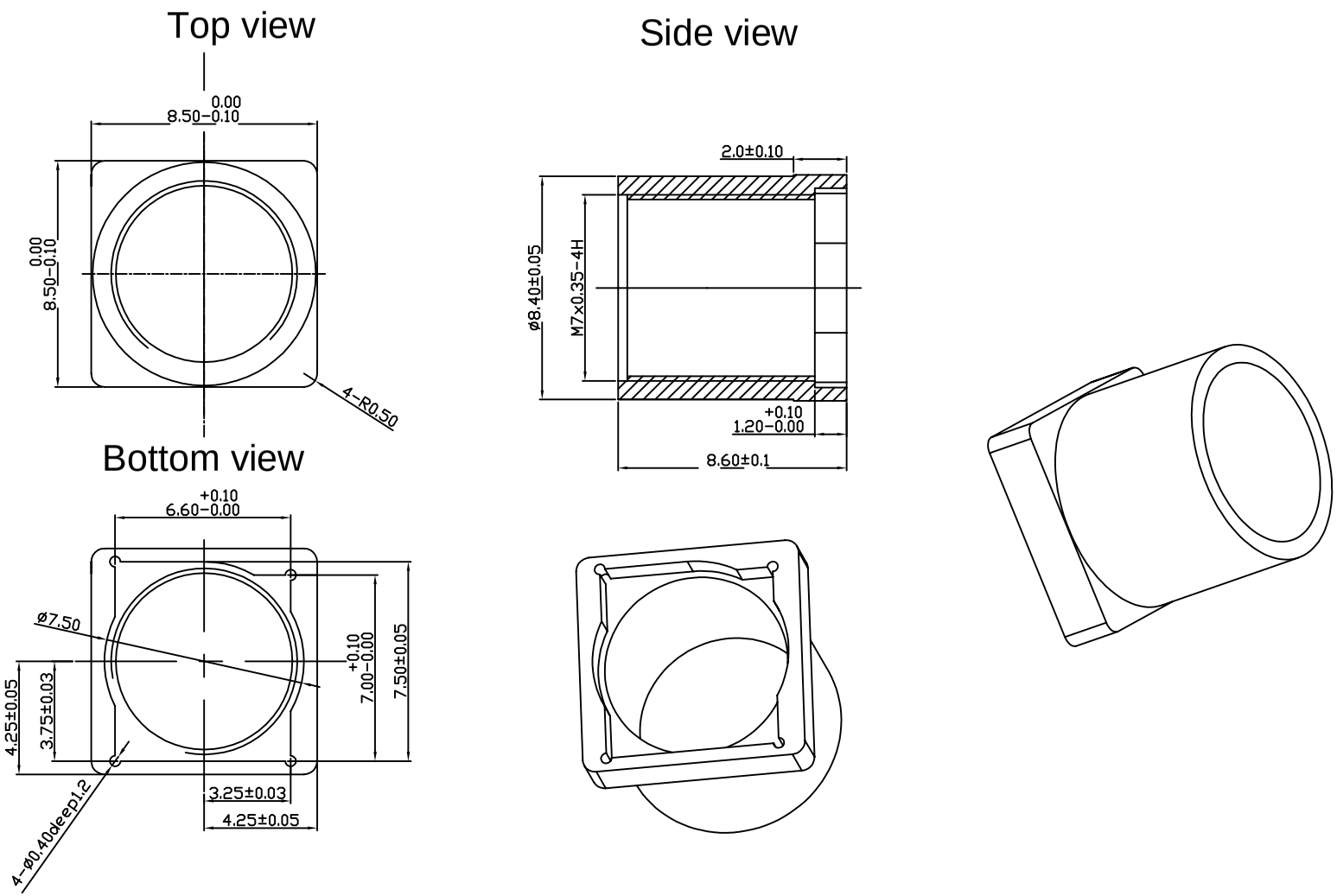

D					
C				Dfaut tolerance	
B				Angle	1°
A	INTIAL RELEASE	11.25.04	Digo	X.X	±0.10
NO.	REVISION CONTENT	DATE	NAME	X.XX	±0.05

Quantity		GR	CR	Material	Brass	Sunex China Tel:0086-21-57740097 Fax:0086-21-57740268	
Total		No					
Marker	signature	Date					
Design	Digo	11.25.04		Unit	mm	Scale		Part Name	CMT829C
Check							
Approve				Rev	A		Description	HOLDER