Compact DSC Lens For CMOS Imager

Description

DSL853 lens is a multi-element glass lens optimized for CMOS imager with 1/2 format. It is especially suited for building low-cost, compact digital cameras because of the low-profile property of the lens design.

Key Features

- Low profile: optical path length <13.5 mm from lens front physical surface to the image plane
- All glass elements: compatible with outdoor environment
- Dual-mode aperture F/3.2: long depth of focus, optimized for focus operation
- High image quality
- Low-cost

Applications

- Compact digital still cameras.

Optical specifications

PN	DSL853
Description	Low-profile DSC lens
Imager Format	1/2"
Imager Resolution	Up to 2.1M
Focal length (mm)	8.0
F/#	3.2
Max. Image Circle(mm)	8.6
Diagonal Field of View (deg)	56.2
35mm Equivalent Focal Length (mm)	43
Modulation Transfer Function (MTF)	See MTF data for details
Resolution	See MTF data for details
Distortion	-1.58%
Corner chief ray angle (deg)	13.54
Relative Illumination	62%
Total optical path length (mm)	12.9
Mechanical	See below
Filter Option	IR-cut coating included
Lens mount option	Optional

PDF created with FinePrint pdfFactory trial version http://www.fineprint.com

Mechanical Dimension (DSL853A version):

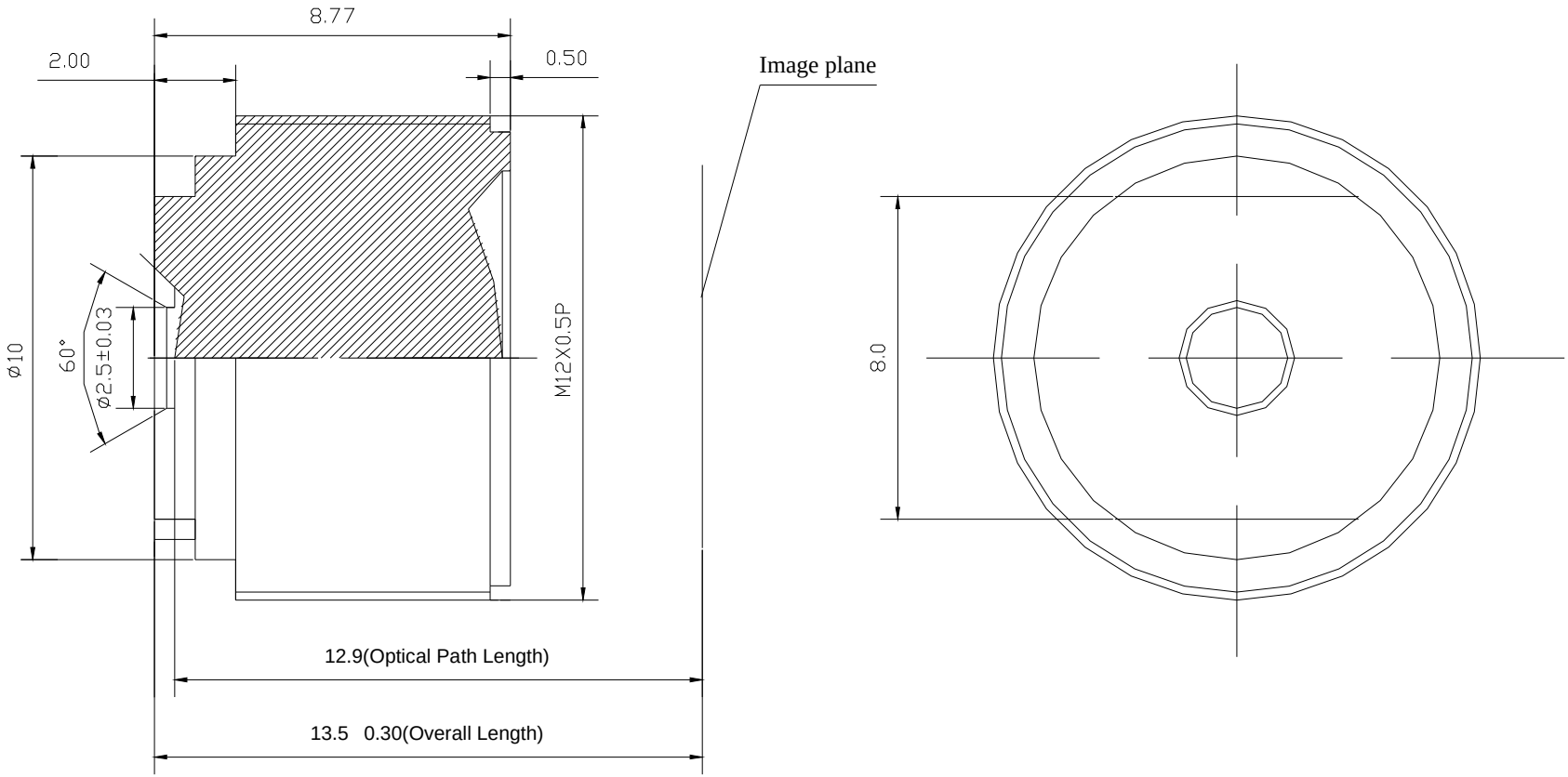

PDF created with FinePrint pdfFactory trial version http://www.fineprint.com

Mechanical Dimension (DSL853B version):

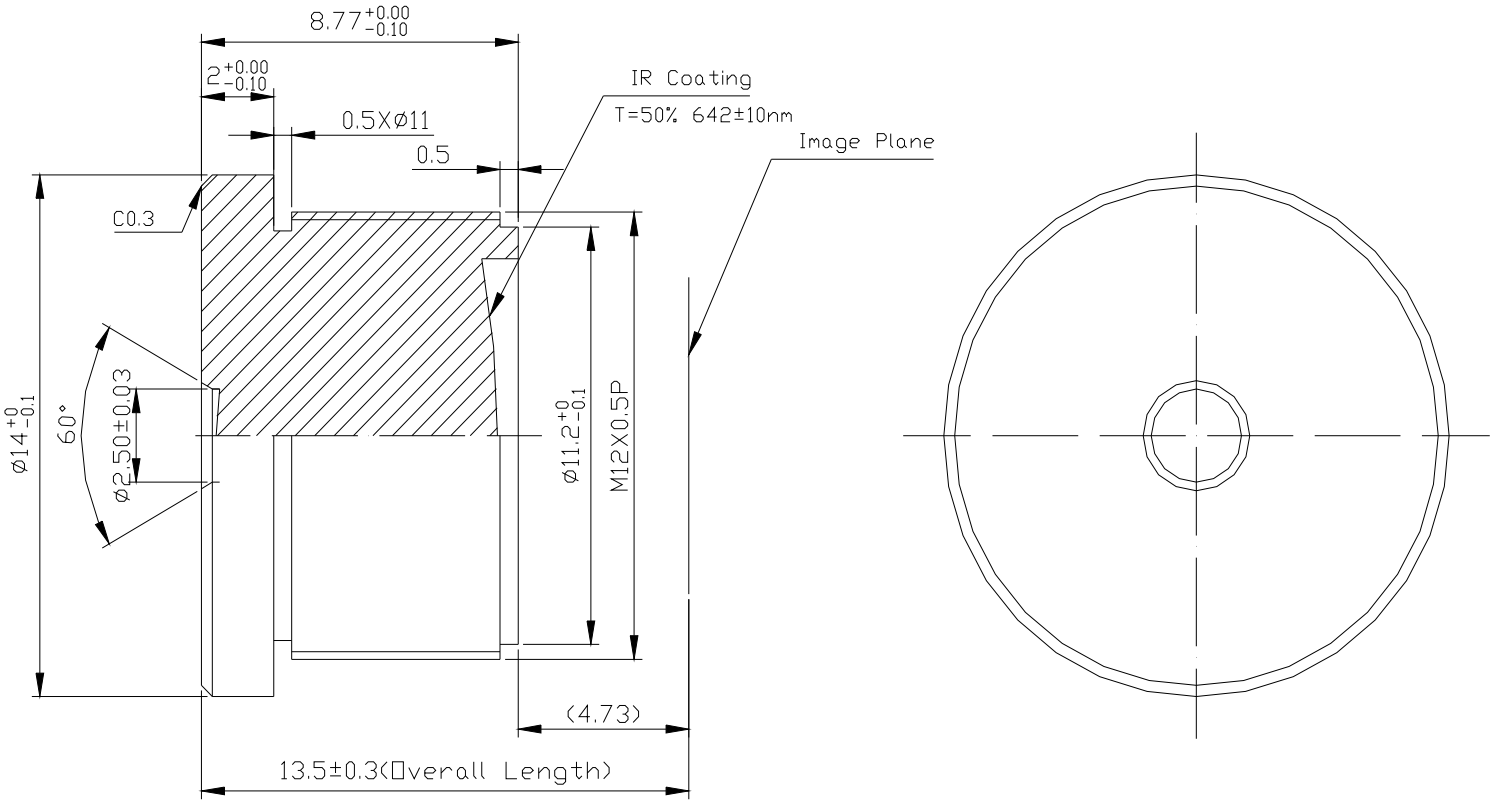

PDF created with FinePrint pdfFactory trial version http://www.fineprint.com