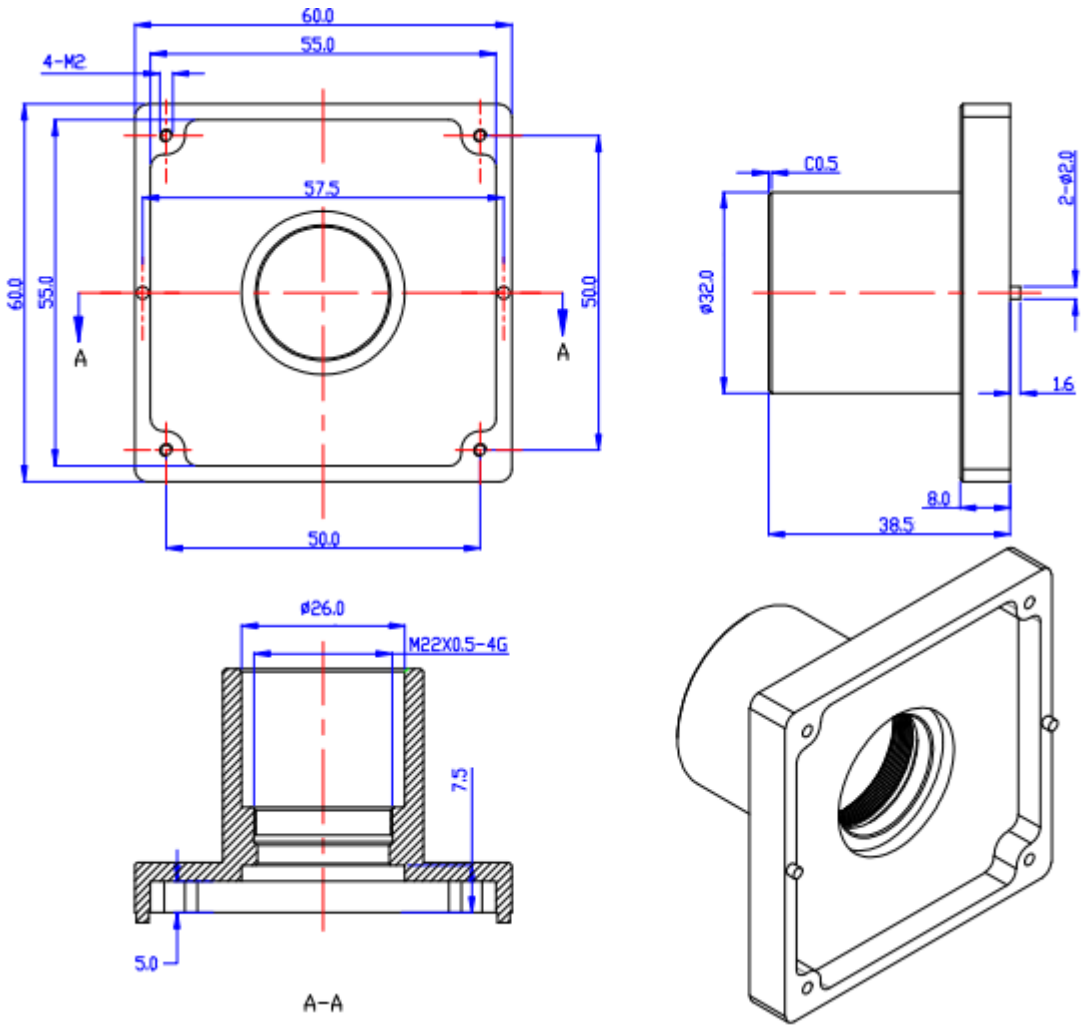

Sunex, Inc.
Telephone: +1 760 597 2966
www.sunex.com