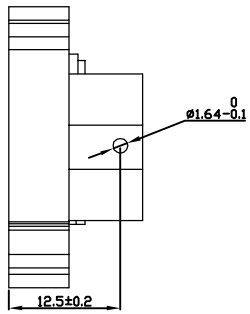

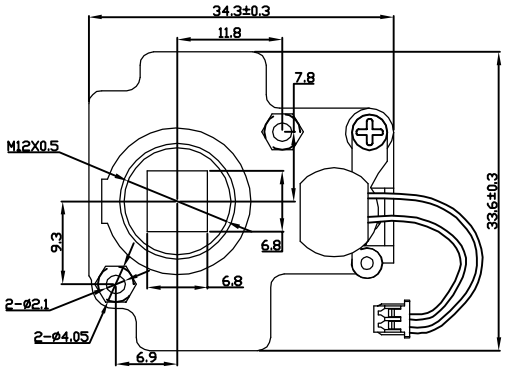

connector details
(for reference)

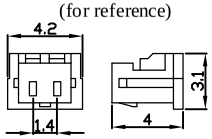

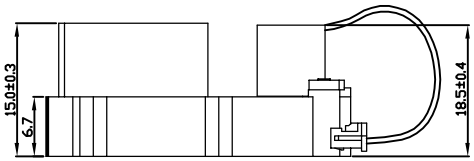

Note:
1.Holder and vane Material: PC(Black)
2.Electric specification:
Rating voltage: 3.0DCV
Power consumption: 0.81W at 3.0DCV
Work voltage: 2.5 to 3.5DCV
Rating current: 270mA
DC resistance: 11.5 OHM ± 10% at 20 ℃
Insulation resistance: 50M OHM min at 500V
Resist voltage: 250V AC 1 Minute
Work temperature: -10 to +40
Lifetime : 30000 times min
3.Standard 2-pin connector with >70mm wire
4.Reverse anode/cathode for operation
5.The thickness of the AR-Window ⩾ the thickness of the IRC30 Filter
The thickness of the AR-Window- the thickness of the IRC30 Filter =0~0.05mm
6.Work mode:
night mode: AR-Window(0.55mm thickness)
day mode: IRC30 Filter(0.55mm thickness)

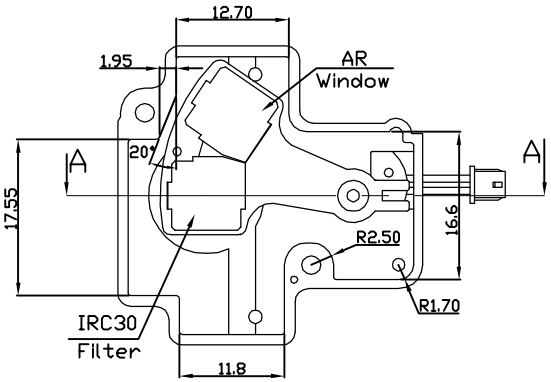

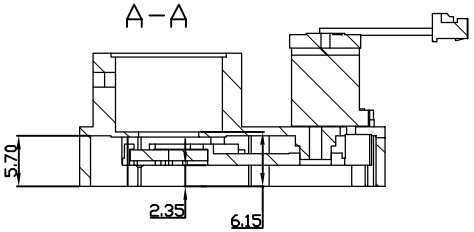

NO.	REVISION CONTENT	DATE	NAME
A	INITIAL RELEASE.	01.20/11	Jeff

Default tolerance	
Angle	1°
X.X	±0.10
X.XX	±0.05

Quantity		GR	
Total	1	No	1
Marker	signature	Date	
Design	Jeff	01.20/11	
Check			
Approve			

Material			
Unit	mm	Scale	
Rev	A		

Sunex China
Tel:0086-21-57740097
Fax:0086-21-57740268

Part Name	M12-EXM-IRC30
Description	Spec
SN	0000000000

PDF created with pdfFactory Pro trial version www.pdffactory.com