The CMT398B is intended for use with long-barrel Sunex 4K lenses with precision fit mounting system barrel design.

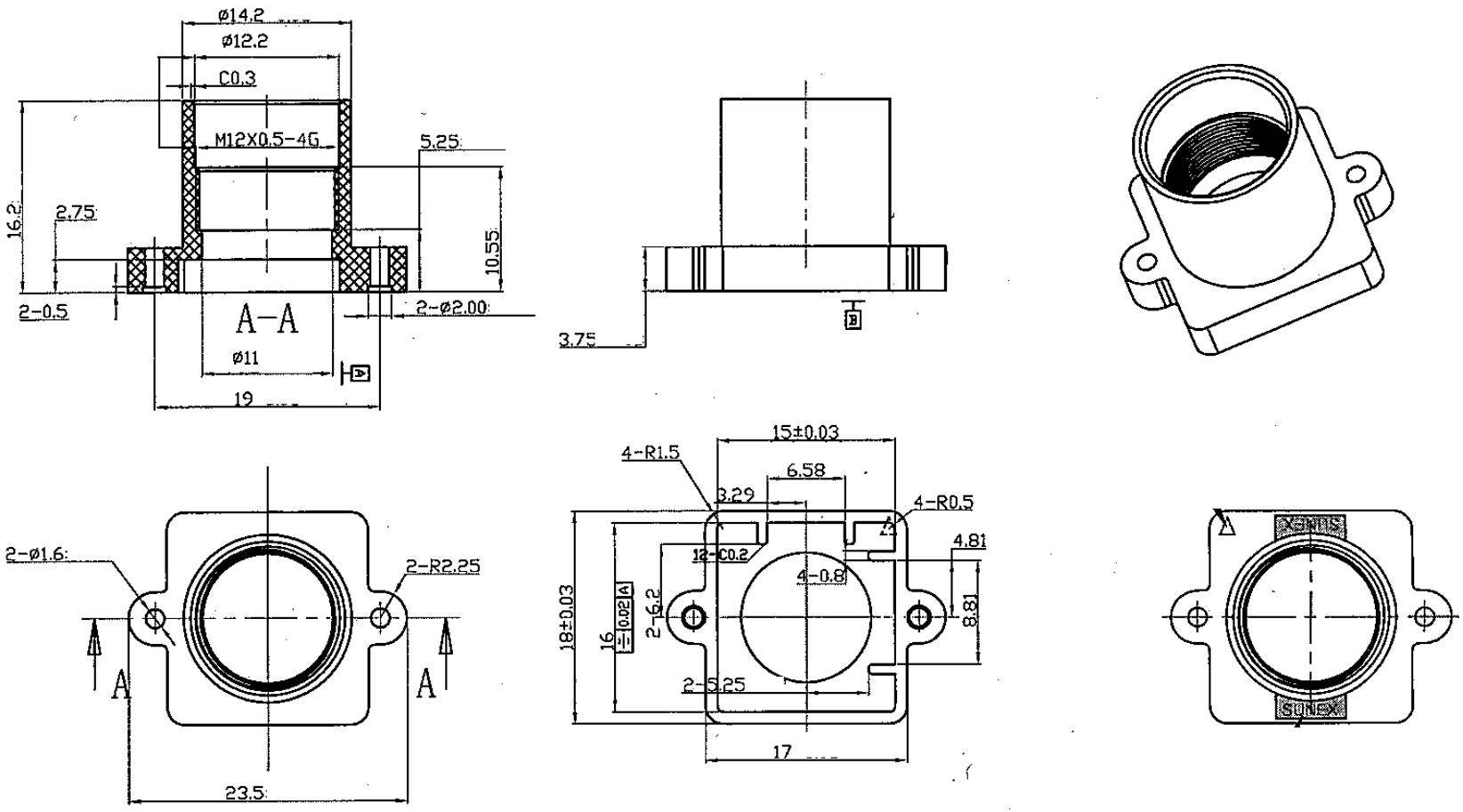

Sunex, Inc.
Telephone: +1 760 597 2966
www.sunex.com